Bolondi
Cleaning Heads

CE

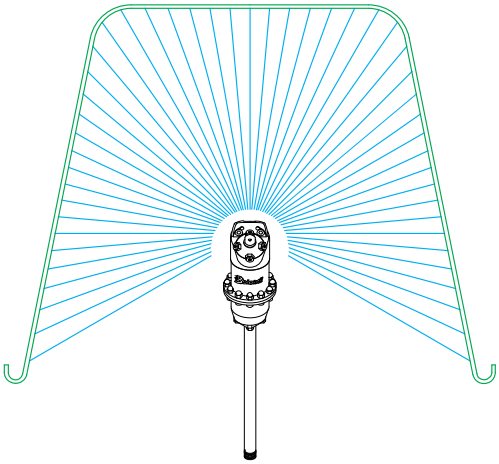

SERVICE MANUAL

SW 053-A.01

SERIAL N°:XXXXXXXX

WARNING: THIS MANUAL IS AN INTEGRAL PART OF THE MACHINE AND MUST BE READ AND KEPT FOR REFERENCE

Translation of the original instructions

SW 053-A.01 MANUAL Rev.00 Last update 02.12.2020

DECLARATION OF INCORPORATION OF INCOMPLETE MACHINES

The undersigned Bolondi Ivano in his role of Legal Representative of Officina meccanica Bolondi Ivano and Person authorised to constitute the technical folder, DECLARES under his own responsibility that the material supplied, indicated in this manual and to which this declaration refers, consists of a washing head that complies with:

- The applicable essential safety requirements (1.1.2 – 1.1.3 – 1.1.5 – 1.3.1 – 1.3.2 – 1.3.3 – 1.3.4 – 1.3.9 – 1.5.1 - 1.5.2 – 1.5.3 – 1.5.4 – 1.5.6 – 1.5.7 – 1.5.8 – 1.5.13 – 1.5.14 – 1.6 – 1.7) of appendix I of machinery directive 2006/42/EC
- The applicable essential safety requirements of directive 2014/68/UE (pressurised equipment classified in art. 4 cat. 3)

It also complies with the following harmonised European standards:
ISO TR 14121-2:2013 - Guidance document for risk assessment
UNI EN ISO 12100:2010 - Safety of machinery - General principles for design.

The undersigned also declares that the incomplete machine cannot be started-up until the machine on which it will be incorporated and of which it will become part has been identified and declared to be compliant with the provisions of directive 2006/42/EC; in other words until the incomplete machine to which this declaration refers has become an integral part of the end machine.
The pertinent technical documents have been drawn-up in compliance with appendix VII B.
We shall forward the information concerning the incomplete machine by fax, e-mail or other means following a reasonable request from National authorities.
(00A-01CE-00-EN)

BOLONDI IVANO
The legal representative
Ivano Bolondi

AIRBORNE NOISE AND VIBRATIONS:

Sound intensity measurements relating to the noise produced by the machine were taken in compliance with DIR. 2006/42/CE.

The acoustic pressure was measured at the workstation, at 1 m from the machine surface and 1.6 m off the ground, in normal machine operating conditions.

Sound intensity measurements gave readings below 70 dB(A).

Measurement of vibrations was not made as these were considered clearly below risk levels.

The intensity of the sound produced by machine operation is normally below sound intensity caused by the impact of washing water against the walls to be washed.

(00D-LdrCE-00-EN)

1) The manufacturer guarantees the rotating head to be free of manufacturing or material defects.

2) Warranty: 2 years for EC countries, 1 year for countries outside the EC (valid from date of delivery).

3) The warranty excludes: all parts subject to normal wear, damage due to carelessness or improper use.

4) The validity of the warranty shall be decided indisputably by the manufacturer.

5) The warranty excludes labour and transport costs, which are always the responsibility of the purchaser.

6) All spare parts replaced under warranty must be returned to the manufacturer, carriage paid, within a maximum of 20 days.

7) The warranty on the finished product or its components shall be void if the product is tampered with, modified, or has parts manufactured by third parties installed on it without prior authorisation from Bolondi.

8) Competent court: Judicial Authority of the court of Reggio Emilia, Italy

(00C-Garanzia-00-EN)

INTRODUCTION 1

Read this operating and maintenance manually carefully before using the head. Only by following the instructions herein and becoming familiar with the symbols used is it possible to obtain conditions of maximum efficiency and safety. The contents of this manual are in compliance with machine directive 2006/42/EC and subsequent amendments. The Manufacturer reserves the right to make any modifications without notice and without incurring any sanctions on condition that the main technical safety features are not affected. The Manufacturer is not responsible for personal injury or material damage resulting from the non-observance of the indications that accompany the symbol. 

N.B.:
For accident prevention purposes the equipment must be fitted with suitable devices to prevent automatic re-starting when the equipment is powered after a shut-down. The head must not be used without these devices. The Manufacturer declines all responsibility in the case of improper use of the equipment.

N.B.:
Please consult the chapter EXPLODED VIEW for all the numbers and references in the manual.

1.1) SAFETY WARNING SYMBOLS

Below are the symbols used in this manual to warn the user of possible risks, which may arise during handling, positioning and use.
(01-000-01-EN)

	**WARNING**	**Safety warning sign. Failure to comply can cause serious personal injuries or damage to the equipment.**
	**PROHIBITION**	**Operations or manoeuvres not permitted**
	**WARNING**	**Moving parts may harm people**
	**HAZARD**	**Ground**
	**PRECAUTION**	**Suggestions and legislation on the subject of protection against explosions**
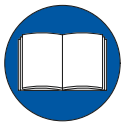	**READ**	**Read the instructions given**

2.1) CHECKING AND UNPACKING

2.1.1) On receipt, make sure that the model and technical specifications correspond with the order.

2.1.2) Make sure that goods were not damaged during transport.

2.1.3) Any damage found when the goods are received must be documented and the sender informed within 3 days of receipt.

2.1.4) Disposal of packaging: the purchaser is responsible for following the correct procedure and applicable regulations in their country for disposing of the consumables and refuse created by unpacking the product.

INSTRUCTIONS FOR CORRECT WASTE MANAGEMENT		
Material	Paper and cardboard	**(EWC code 15 01 01)**
	Plastic	**(EWC code 15 01 02)**
	Wood	**(EWC code 15 01 03)**

2.2) DEMOLITION AND DISPOSAL

It is the purchaser's responsibility to follow the correct procedure and comply with the current laws in force in his country as regards to disposing of consumables and materials resulting from demolition.
Please remember that by waste is meant any substance or object under obligation of disposal.
According to their origin and pursuant to the above mentioned Decree, waste products are classified as urban or special waste and, depending on their dangerous characteristics, as hazardous or non-hazardous waste.
Waste resulting from the demolition of the machine is classified as special waste.

WARNING: it is forbidden to mix together different categories of hazardous waste and hazardous waste with non-hazardous waste.

INSTRUCTIONS FOR THE MOST APPROPRIATE HANDLING OF WASTE

Ferrous materials (EWC code 17 04 05):

As this is recyclable material (secondary raw materials), it should be taken to an authorised collection centre.

Plastic materials (EWC code 16 02 16):

Recycling permitted where landfill disposal is performed for urban-type waste.
Incineration permitted in plants equipped with post-combustion and fly-ash capture systems.
Follow applicable national legislation, as amended.

(02-000-00-EN)

3.1) Never point the jet of water at people, animals or electrical parts.

3.2) Always check that the equipment and the safety features are in good working before using the machine. It is forbidden to use the equipment if it is not in perfect condition.

3.3) Intended use: the head was designed exclusively for washing closed containers.

3.4) Improper use: any other use that does not comply with the safety standards indicated in this manual is to be considered improper.

3.5) Declaration of the manufacturer: if the head is installed, as a component, on machines or systems, it is forbidden to use it before the latter have been declared to comply with the provisions of the Machine Directive.

(03-000-00-EN)

4.1) The equipment must be started only by personnel in charge of the plant and only after it has been validated.

4.2) Ensure that the device is securely blocked by the flanging.

4.3) When the equipment is inside the container or plant, check that it does not collide with any of the moving parts.

4.4) Before start-up, check that all the openings, valves, etc., are closed and allow no pressurised jets escape.

4.5) Make sure the supply pipes and connection fittings are suitable for the working pressures/flow rates and for the type of fluids used.

4.6) Ensure that the screwed coupling of the connecting hoses is airtight.

4.7) Make sure the supply motor pump is fitted with a relief valve and its setting is compatible with the head.

4.8) Make sure the quantity and diameter of the nozzles are suitable for the characteristics of the plant (pump pressure and flow).

4.9) The high pressure hose must be perfectly intact (to avoid the risk of bursting). If the high pressure hose is damaged, it must be replaced immediately.

4.10) Do not inspect the container or plant when the head is working or in the presence of considerable quantities of vapour.

4.11) Each time before using and after each use, make sure the screws are perfectly tight. **See table B "tightening torques".**

4.12) The symbol marked on the head draws the operator's attention to situations that could jeopardise workers' safety.

4.13) The general safety and accident prevention regulations laid down by law must be observed, as well as the warnings given in the operating instructions.

(04-00CE-00-EN)

FLOW	*10 - 60 LT/MIN*
PRESSURE MAX	*150 BAR*
HYDROSTATIC TEST PRESSURE	*255 BAR*
MAX OPERATING TEMPERATURE	*90 °C*
WATER INLET	*1/2″*
FILTER	*700 MICRON*
NUMBER OF NOZZLES	*2 - 3 - 4*
NOZZLES	*1/8″ NPT*
O.RING	*NBR - EPDM - VITON*
SEALS	*PTFE+CARBON FIBRE*
MATERIAL	*AISI 316 - ALUMINUM - BRASS*
MIN.CENTER LINE THROUGH HOLE	*Ø114 MM*
MIN.MANUAL THROUGH HOLE	*Ø90 MM*
DIFFUSER	*SEE CHART "A"*
CONICAL GEARS	*FIXED Z=22 ROTATING Z=23*
MODULE	*2*
FULL CYCLE	*23 ROTATIONS*
FULL CYCLE TIME	*15″ AT 90 RPM*
WEIGHT	*KG ~2,700*

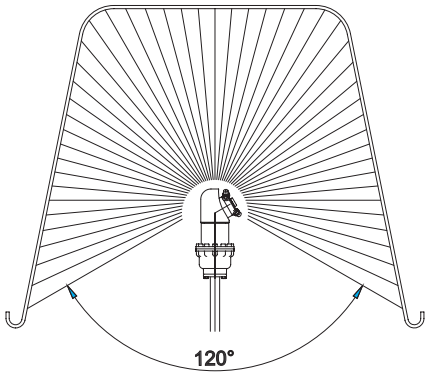

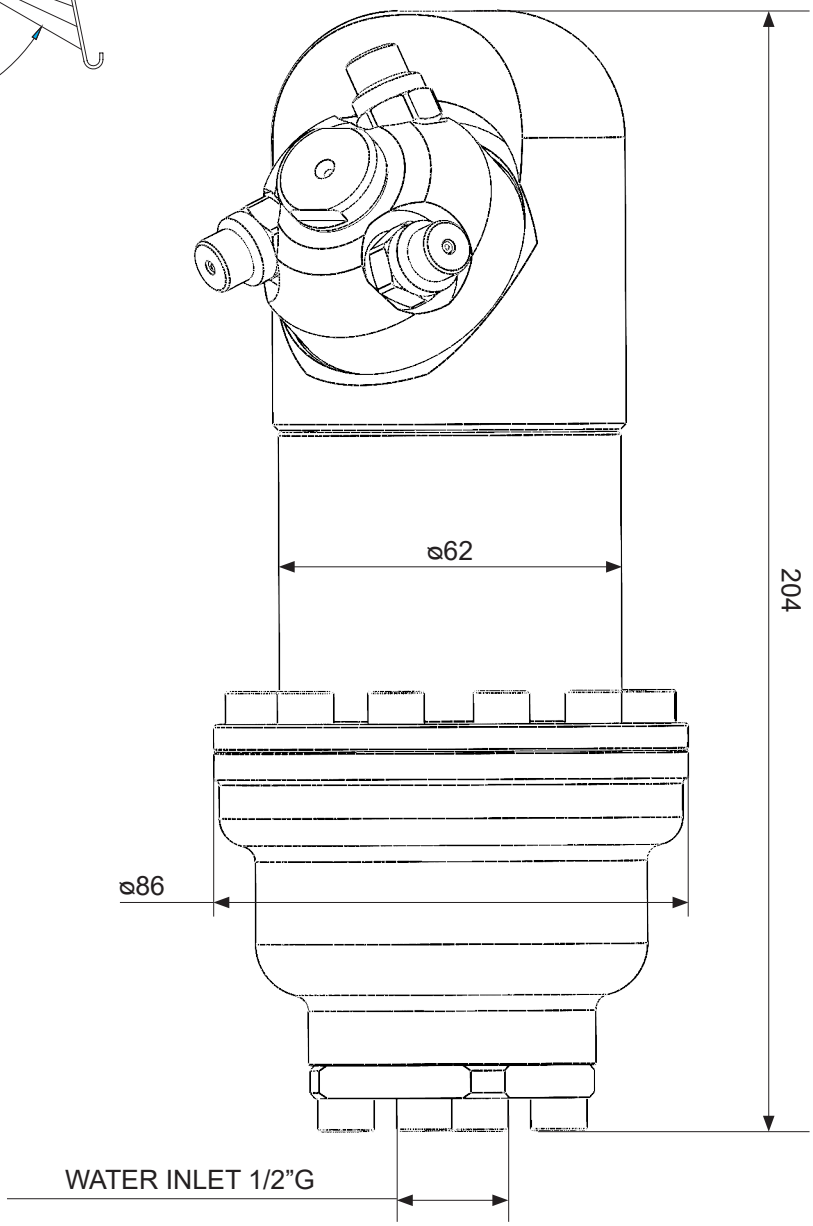

VERSIONE	01	02	03	04	05	Bolondi CLEANING HEADS MONTECCHIO E. (RE) - ITALY
FOGLIO	XXXX					
DATA	09.03.20					
VERSIONE	06	07	08	09	10	
FOGLIO						
DATA						

NOTE:

DESCRIZIONE:

SW 053-A.01
APPLICATION DRAWING

DISEGN.: CR	CONTR.: DM	
DATA: 09.03.20		VERSIONE
SCALA 1:1	A3	01
CODICE: SW053-AA		

1) Rotating head
2) Nozzle
3) Nozzle-holder
4) Identification plate
5) Main body
6) Water inlet
(06-SW053-00-EN)

3-way version **4-way version**

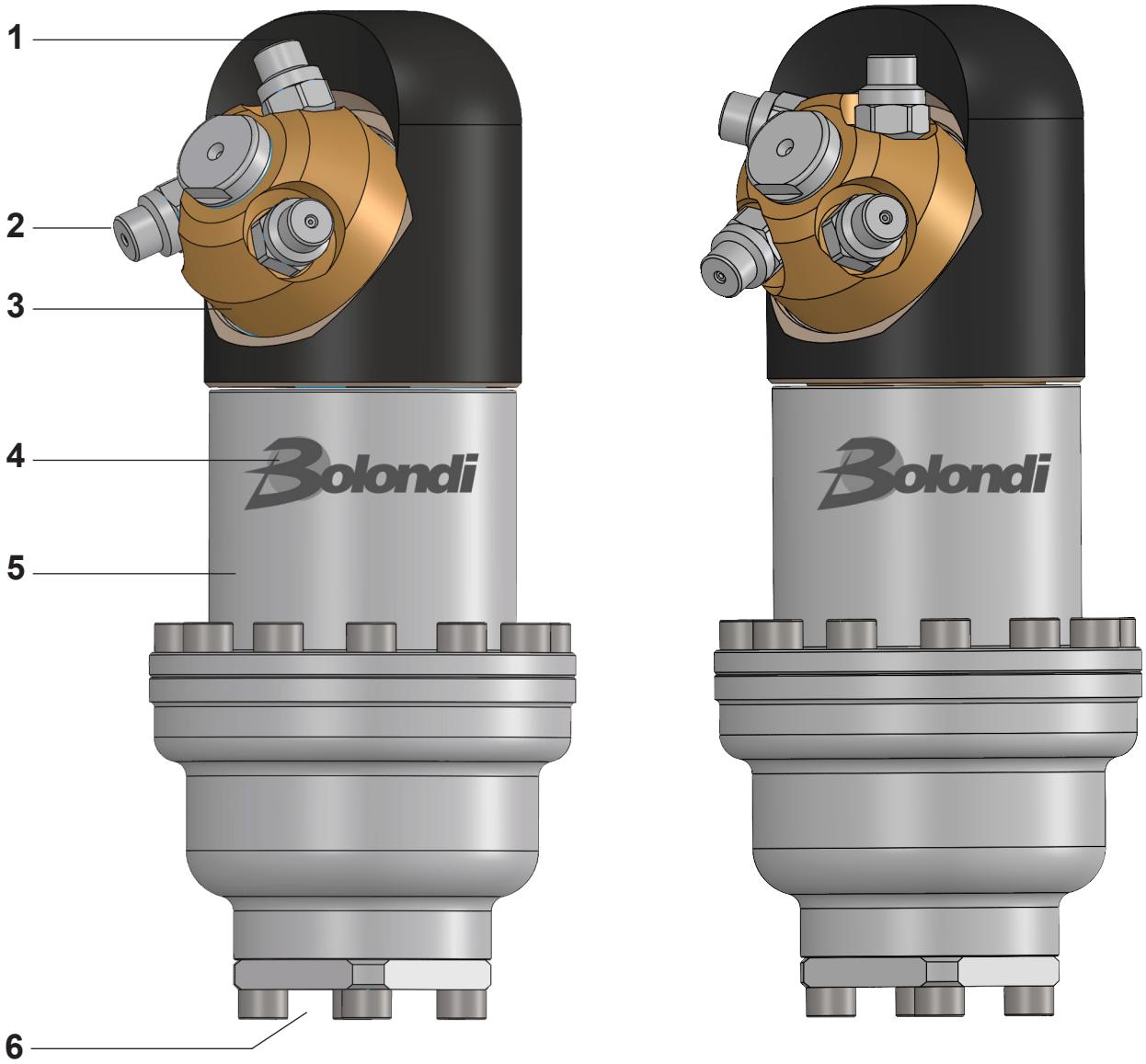

7 INSTALLATION AND COMMISSIONING (WARNINGS)

During installation and commissioning, comply with the indications in Chapter 04 of the General Safety Standards in this Manual. If the aforesaid indications are not complied with, the Manufacturer shall not be held liable.

See the Technical Data Chapter in the Manual for the pump/head connection and fastening.

Before switching on, it is advisable to flush the system to get rid of any waste or impurities.
Any breakage or problem due to waste and/or impurities is not covered by the warranty.

It is advisable to install a 60 micron filter between the head and the pump assembly.

Install a safety valve on the head delivery, set at the maximum pressure indicated on the rotating head or in the Technical Data Chapter in this Manual.

N.B. Do not turn the nozzle holder by hand.

N.B. The head is calibrated with the specifications required in the order.
If there are any changes to these parameters, please contact the Manufacturer.
Any breakages or problems due to parameters that do not conform with specifications, shall not be covered by the warranty.
(07-AQM-00-EN)

Upon consignment, the head is built as requested in the order placed.

If the flow rate is varied, for best use replace the diffuser pos.4.

From table “A”, choose the most suitable diffuser pos.4 for the new parameters.

It is understood that in the event of variations, the nozzles pos.30 must also be replaced.

Before you make any changes you are recommended to contact the manufacturer.

Follow the procedure given in the maintenance manual to replace the internal diffuser.

TABLE “A”						
FLOW LT/MIN	10	15-18	20-25	30-35	40-45	50-55-60
DIFFUSER CODE	DF1910	DF1920	DF1930	DF1940	DF1950	DF1960
PARAMETERS: 100 BAR - T=20°C						

(08-CA0285-00-EN)

WARNING:
Disconnect the head from the system before starting any routine or extra-ordinary maintenance.

IMPORTANT: See the chapter entitled Exploded Drawing for the numbering and references used
IMPORTANT: See Table "B" for the torque values of components tightened with a torque wrench

Lubricant recommended for maintenance: PETRONAS TUTELA ZETA 2 grease.

9.1) CLEANING THE INLET FILTER POS.3

Disassembly

9.1.1) Use a 5 mm allen wrench to loosen and remove the screws pos. 2, disassemble the filter holder flange pos.1, and remove the cartridge pos.3 (Fig.9.00).

9.1.2) Clean the cartridge pos.3 thoroughly, make sure there is no breakage, and fit back in place (pay attention as shown in fig.9.01)

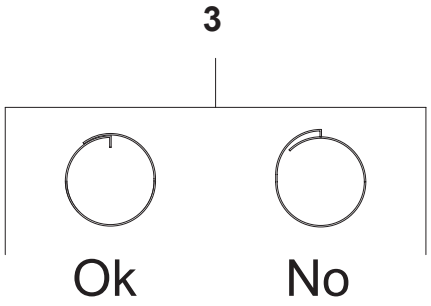

Fig. 9.01

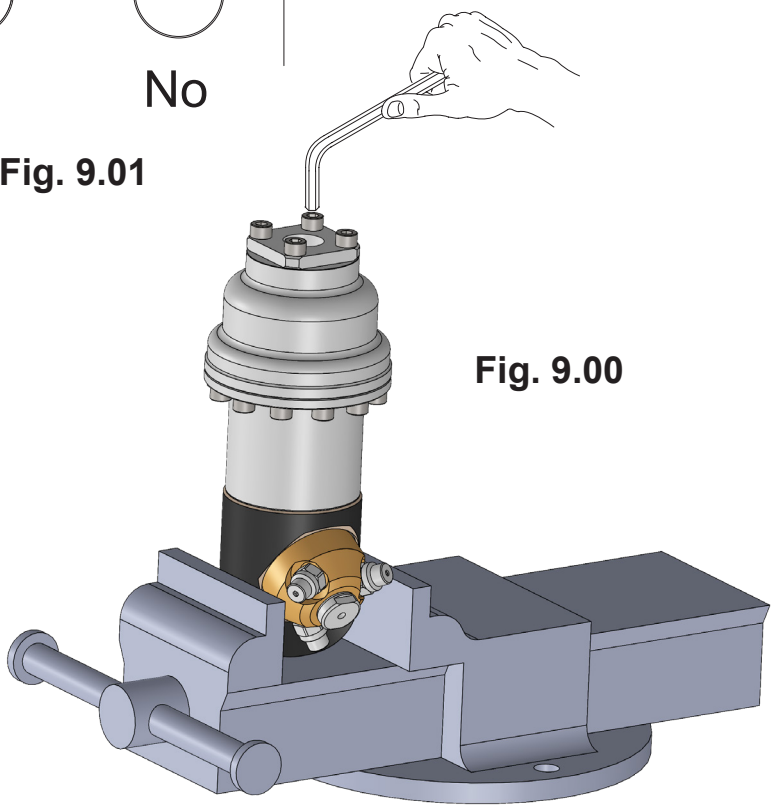

Fig. 9.00

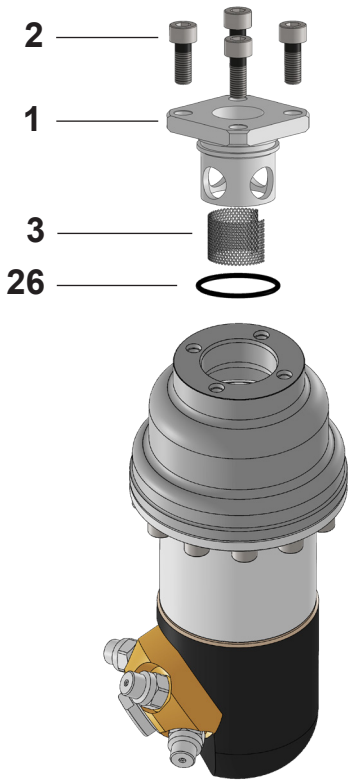

Assembly

9.1.3) Grease the filter holder flange pos.1 by the O-ring pos.26.

9.1.4) Put the filter holder flange pos.1 back in its seat.

9.1.5) Tighten the screws pos.2 using a torque wrench.

9.2) REPLACING THE DIFFUSOR POS.4

Disassembly

9.2.1) Remove the inlet filter as explained in section 9.1.1.

9.2.2) Use a 5 mm allen wrench to loosen the twelve screws pos.2 from the body pos.23, see fig.9.02.

9.2.3) Remove the top casing pos.24 and push out the diffusor pos.4 (Fig. 9.03), then replace it after having selected the desired diffusor as per table "A" chapter 8.

Fig. 9.03

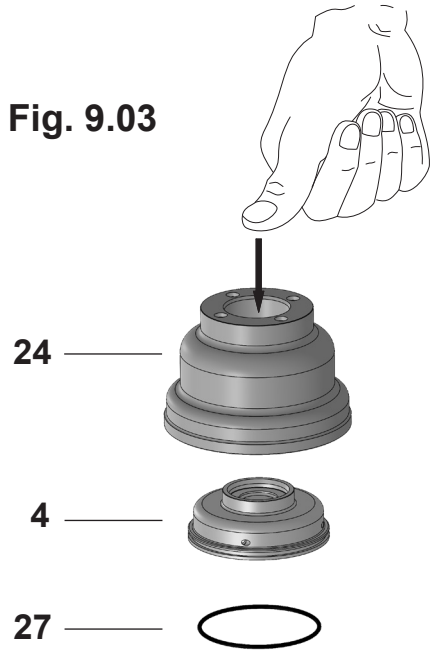

Fig. 9.02

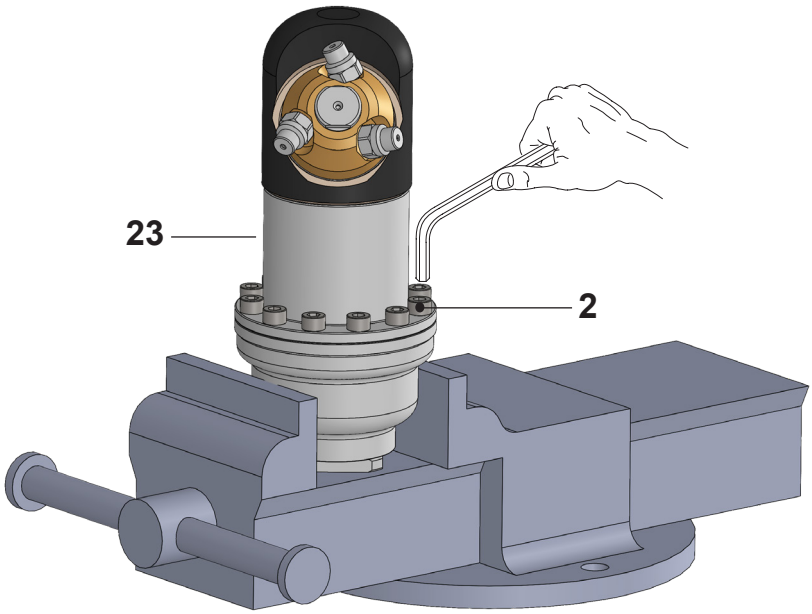

Assembly

9.2.4) Check and if necessary replace the O-Ring pos.27.

9.2.5) Fit the diffusor on the impeller kit "pos.5", making sure to position the washer pos.6 correctly (see fig.9.04).

9.2.6) Position the top casing and secure it with the twelve screws pos.2. Use a torque wrench to tighten.

9.2.7) Re-fit the inlet filter as specified in section 9.1.3 at 9.1.5.

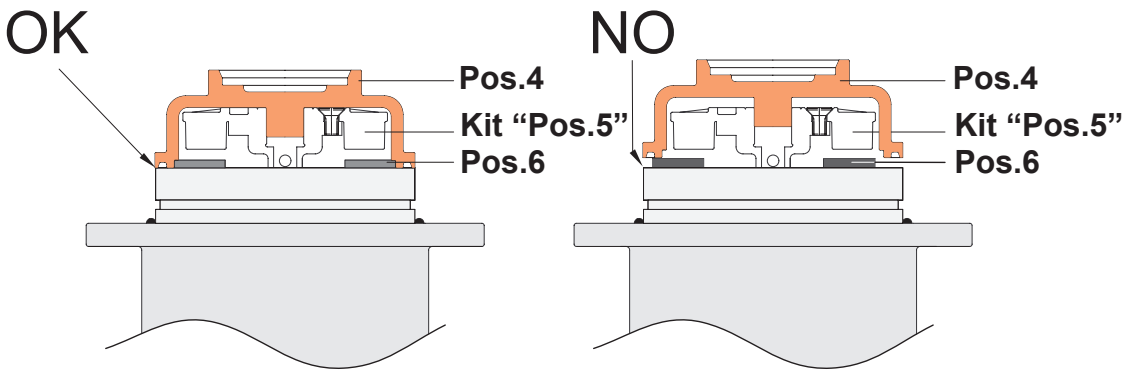

Fig. 9.04

9.3) REPLACING SEALS POS.29 IN THE NOZZLE HOLDER HUB POS.17

Disassembly

9.3.1) Use a 17 mm fixed jaw spanner to unscrew the pin pos.20 (Fig.9.05).

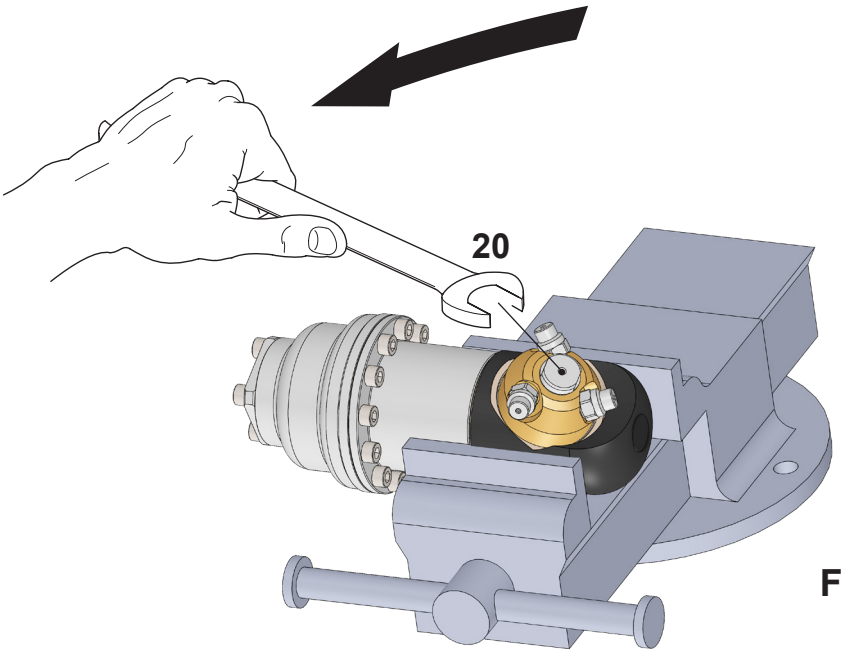

Fig. 9.05

9.3.2) Slide out the pin pos.20 from the nozzle holder crown and remove the washers pos.15 - 19 (Fig.9.06).

9.3.3) Use the dedicated tool to remove the seals and the O-ring pos.29 from their seats on the nozzle holder unit (Fig.9.07).

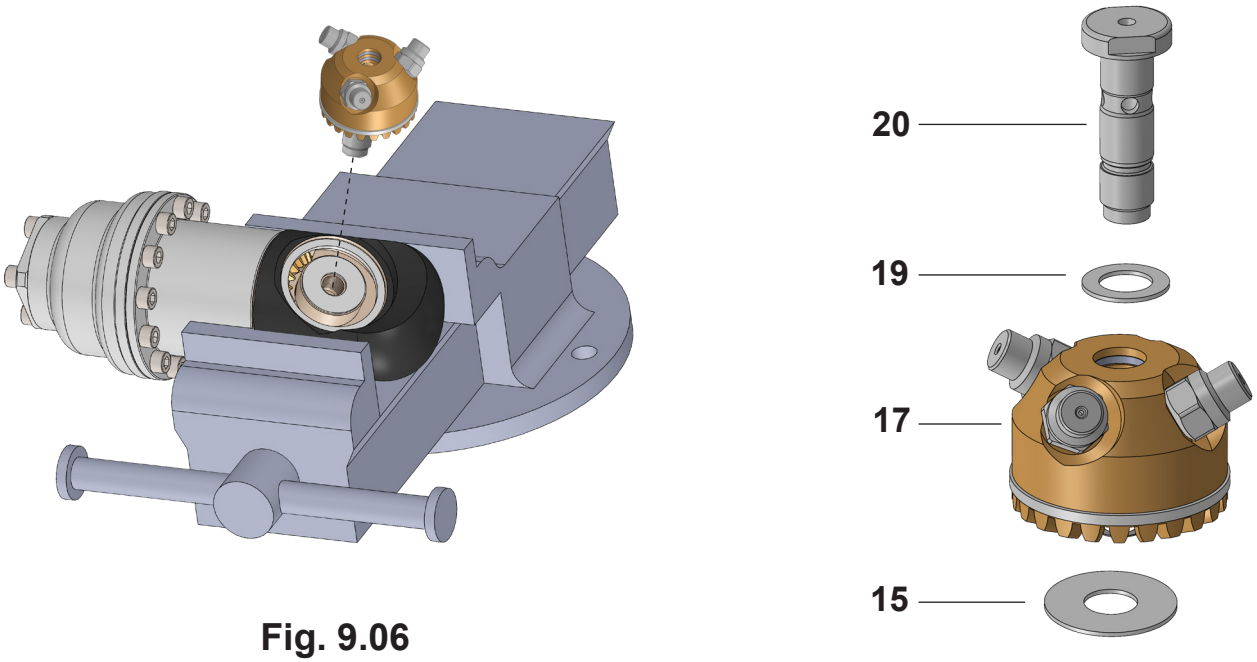

Fig. 9.06

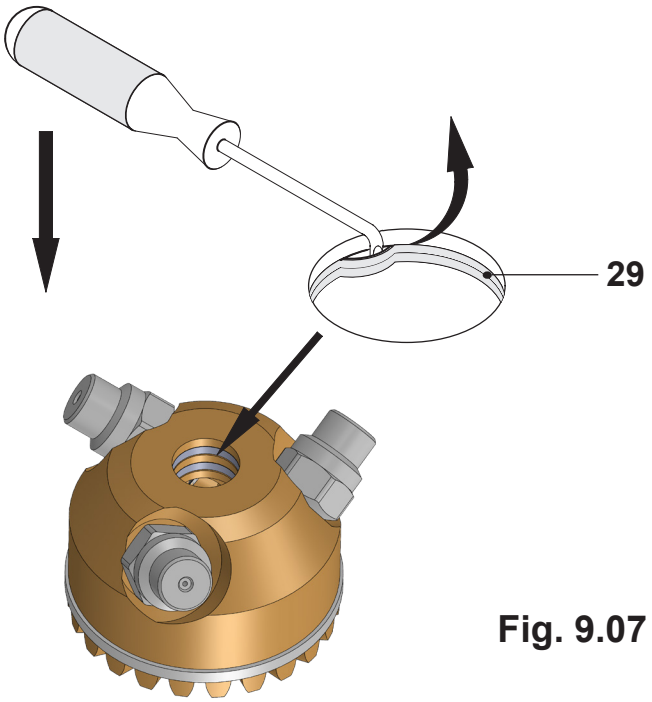

Fig. 9.07

Assembly

9.3.4) Put the O-ring back in its seat first and then the seal ring pos.29, making it adher perfectly to the O-ring using a blunt tool. To facilitate the introduction of the ring, follow the indications shown in fig.9.08.

9.3.5) Make sure all components are fitted correctly in their seats and lubricate with grease.

9.3.6) Fit the washer pos.19 on the pin pos.20 first, then insert the pin in the nozzle holder crown (to make it easier to fit the threaded part through the seals, turn as if screwing), then fit the second washer pos.15 (Fig.9.09).

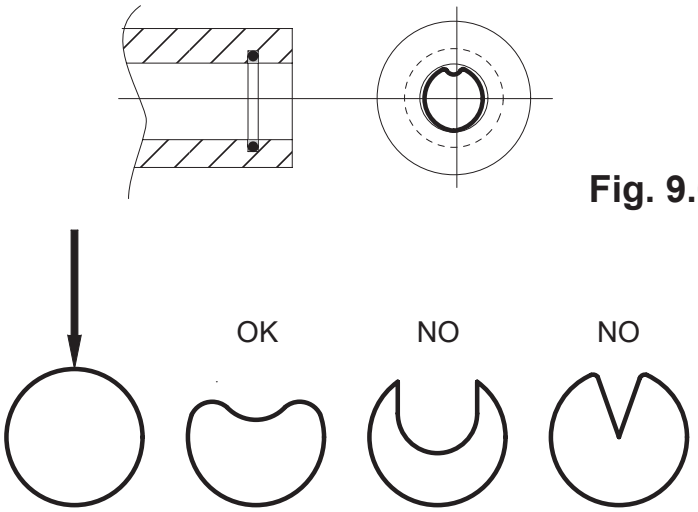

Fig. 9.08

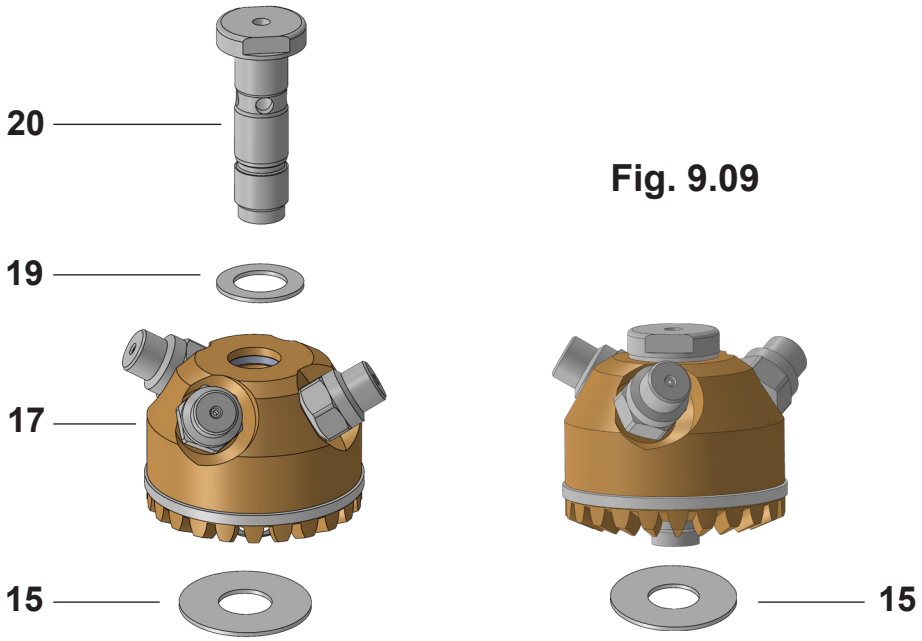

Fig. 9.09

9.3.7) Apply a few drops of loctite 572 on the thread of the pin pos.20, screw the complete unit onto the casing pos.16 (Fig.9.10), and tighten using a 17 mm fixed jaw spanner, checking for correct coupling of the bevel gears pos.13 and pos.17 (see exploded view diagram).
Use a torque wrench to tighten.

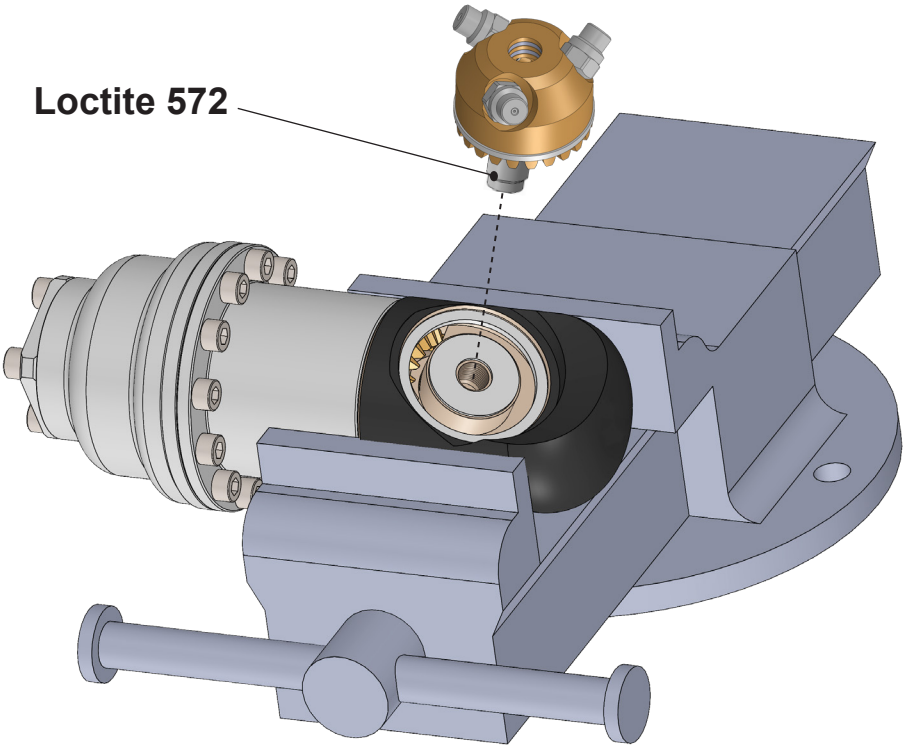

Fig. 9.10

9.4) REPLACING THE SEALS POS.29 SITUATED IN THE PINION POS.13

Disassembly

9.4.1) Using a no.17 spanner, unscrew the pin pos.20 as explained in paragraph 9.3.1 and remove the complete unit.

9.4.2) Disassemble the top casing pos.24 from paragraph 9.2.1 to paragraph 9.2.3.

9.4.3) Remove all components from the head, as shown in fig.9.11 and fig.9.12.

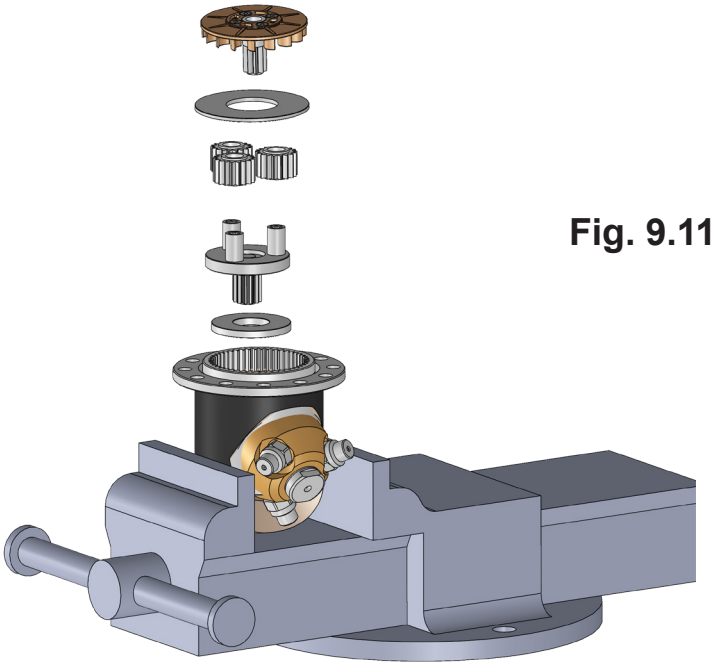

Fig. 9.11

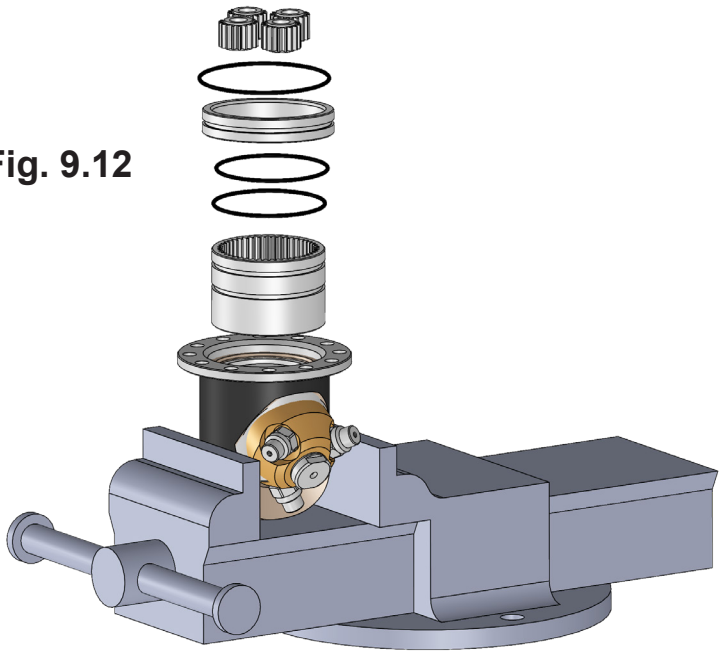

Fig. 9.12

9.4.4) Insert the special key (code BZ0031) on the central shaft pos.9 and use a 17 mm fixed-jaw to unscrew the above part (Fig.9.13).

9.4.5) Remove the casing pos.16 and the washer pos.15 (Fig.9.14).

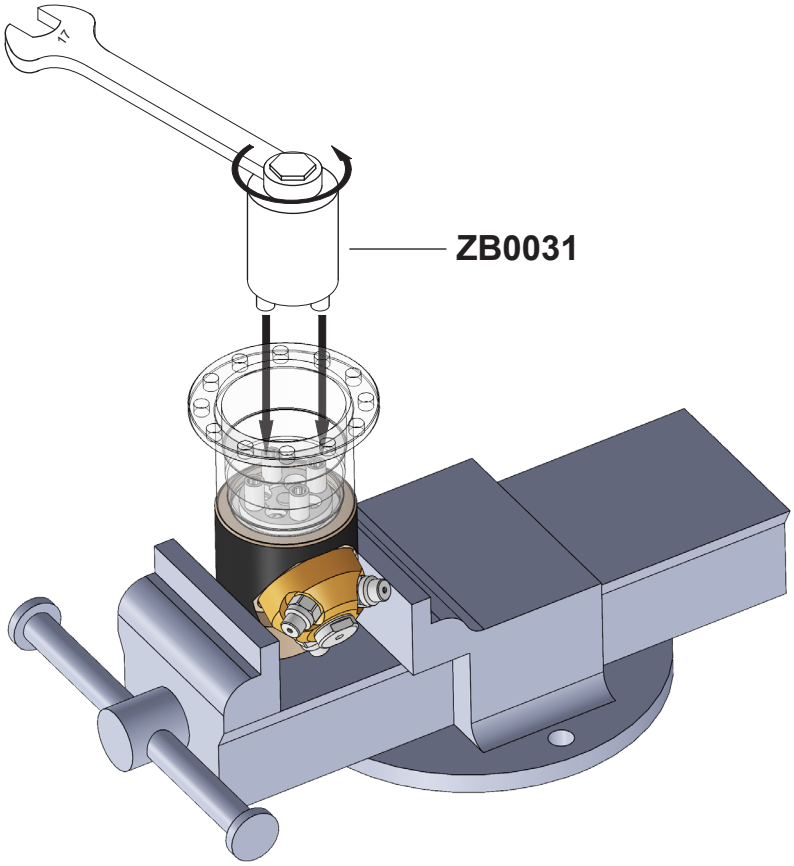

Fig. 9.13

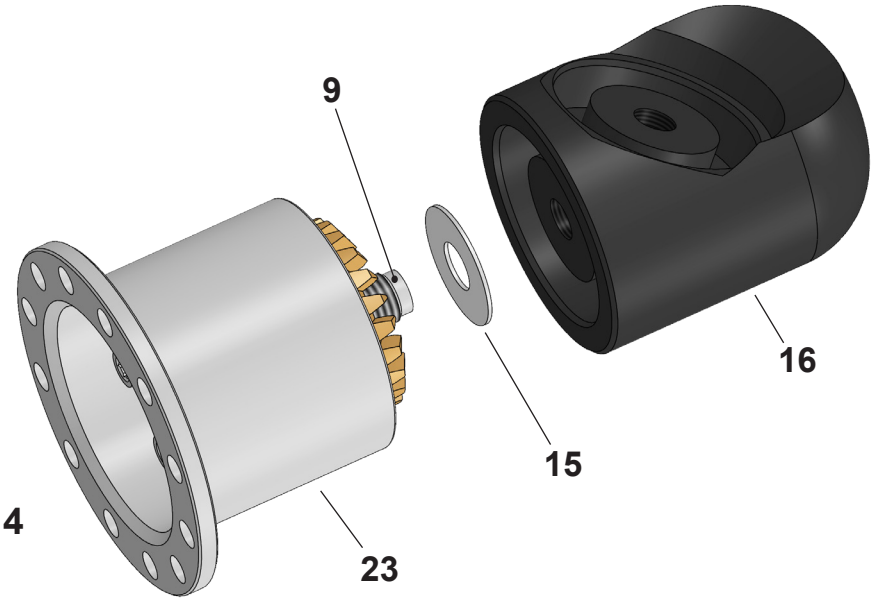

Fig. 9.14

9.4.6) Push the shaft pos.9 fig.9.15, the bearing made up of part pos.12 and parts pos.11 out of part 23.

9.4.7) Using the dedicated tool, remove the seals and the O-rings pos.29 from their seats (Fig.9.16).

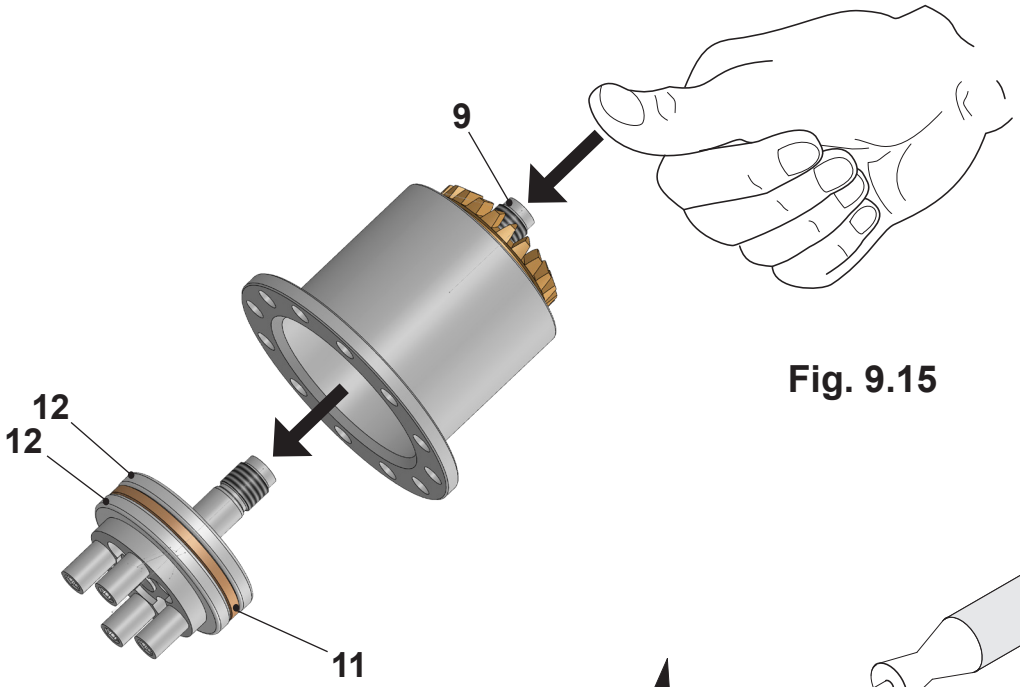

Fig. 9.15

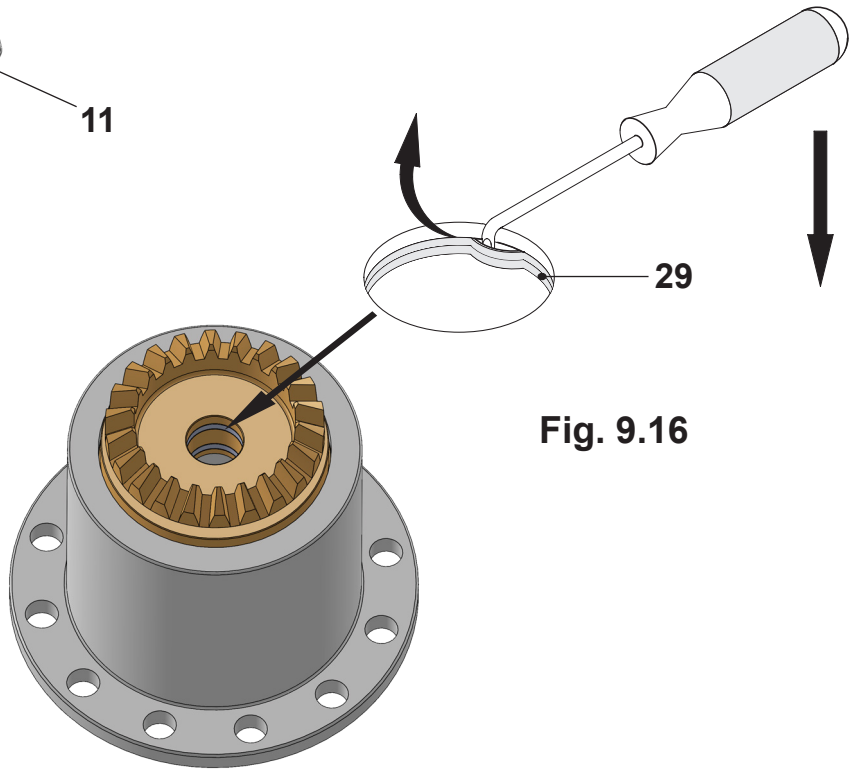

Fig. 9.16

Assembly

9.4.8) Replace the O-ring in its seat and then the sealing ring pos.29 making them adhere perfectly to the O-ring using a blunt tool.
To make it easier to insert the ring, follow the instructions in Fig.9.08.

9.4.9) Make sure everything is assembled correctly, in place in its housing and properly greased.

9.4.10) Insert the following inside the bottom casing pos.23 in the order shown: a slewing bearing pos.12 with the seat of the balls facing up, cage pos.11 with the twelve balls and a second slewing bearing pos.12 with the seat of the balls facing down (Fig.9.17).

9.4.11) Insert the output shaft pos.9 into the bottom casing pos.23 (to make it easier to fit the threaded section through the seals, turn the shaft as if it were being screwed in).

9.4.12) Insert the washer pos.15 in the shaft pos.9 and screw the casing pos.16 on the same (put a few drops of Loctite 222 on the thread); tighten with the dedicated key (code ZB0031) and torque wrench set as in table "B" of the manual (Fig.9.18).

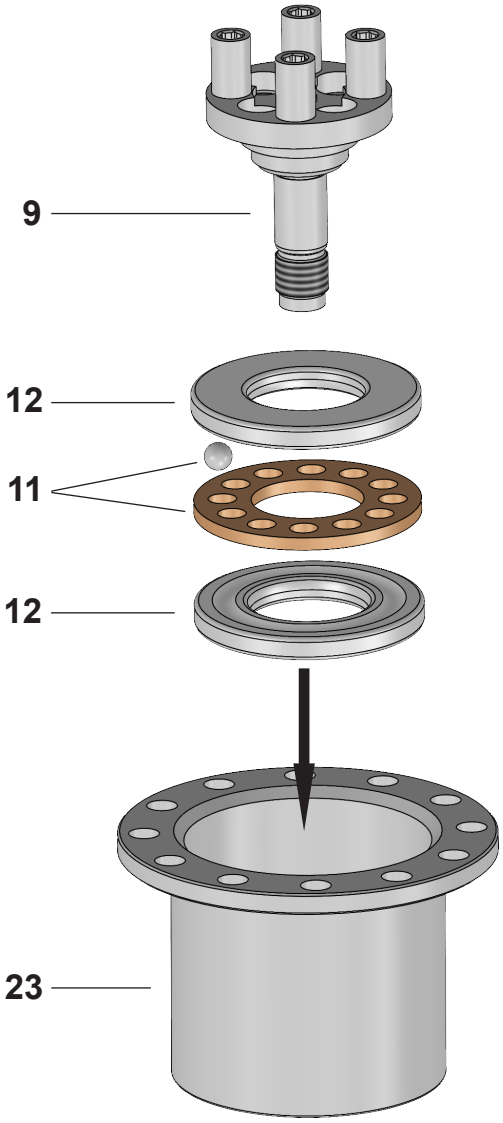

Fig. 9.17

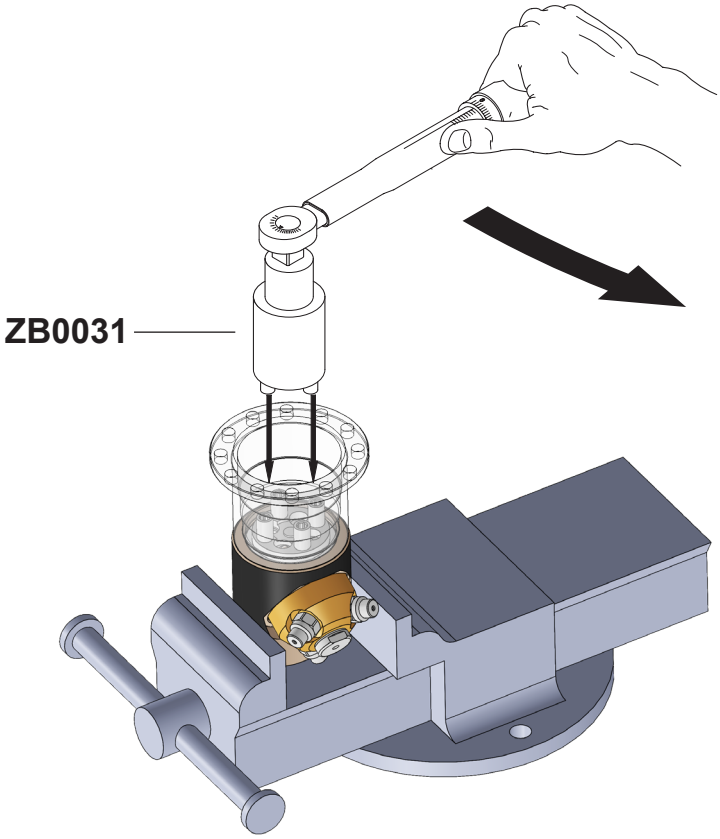

Fig. 9.18

9.4.13) Insert the following into the casing pos.23 in the order shown: the crown pos.22 (check the O-rings pos.28 and replace if necessary), the four gears pos.18 on the previously assembled output shaft, the washer pos.10, the planetary gears holder pos.7, the three planetary gears pos.8, the flange pos.21 (check the O-ring pos.27 and replace if necessary) fig.9.19 – 9.20.

9.4.14) Position the washer pos.6 and check if the assembly is correct, making sure there isno friction between the part pos.6 and the gears pos.8, see fig.9.21.

9.4.15) Install the complete impeller unit and finish the installation as described from paragraph.9.2.5 to paragraph 9.2.7.

(00M-SW053-00-EN)

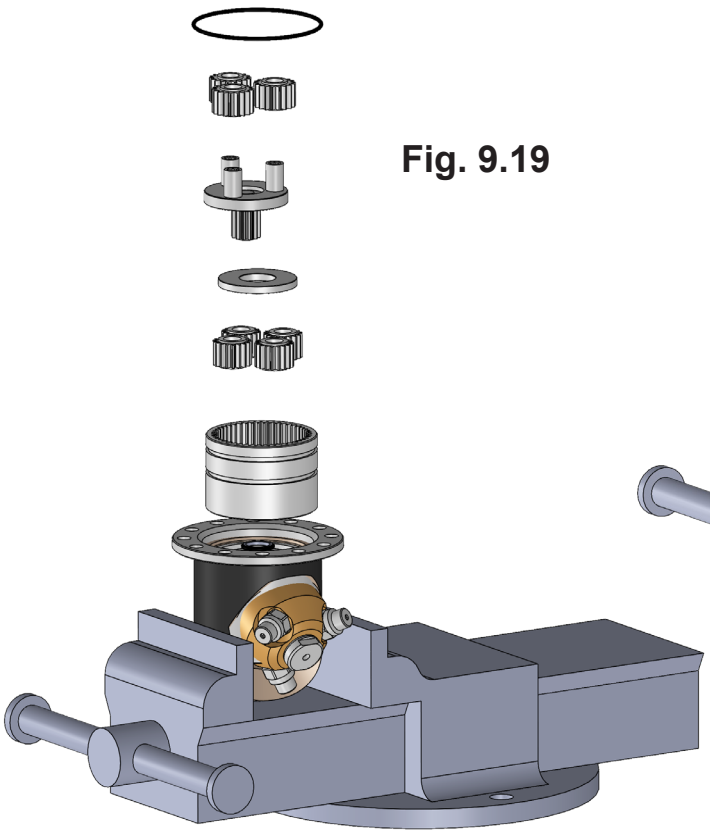

Fig. 9.19

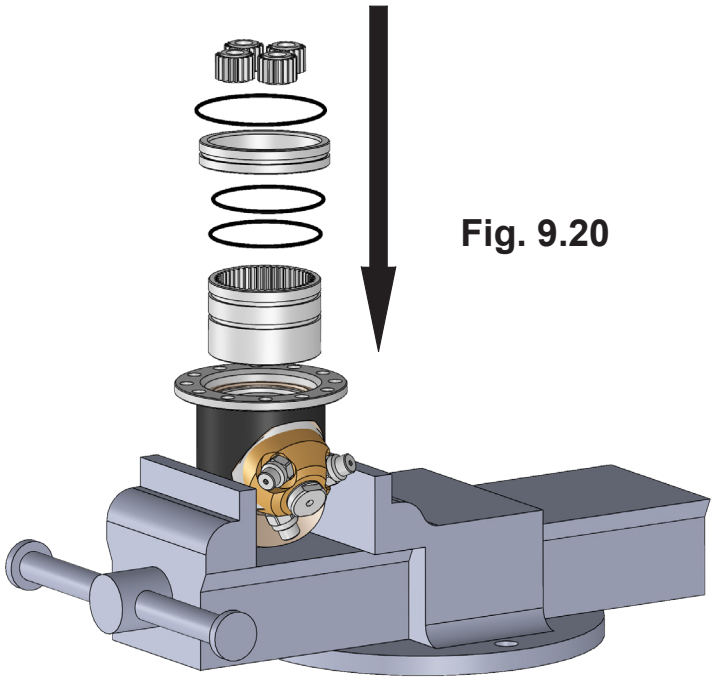

Fig. 9.20

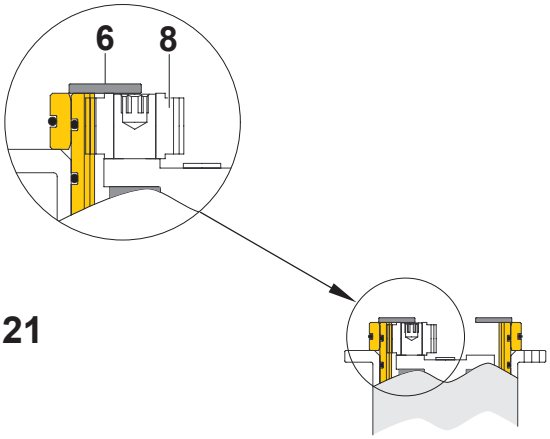

Fig. 9.21

Always refer to the spare parts tables when choosing spare parts. Spare parts should be requested to following address:

Bolondi
Via A. Volta, 4 - 42027 MONTECCHIO (RE) - ITALY
Tel. +39 0522 864434 Fax +39 0522 865780
e-mail: bolondi@bolondi.com

always indicate:
- the model and serial number of the head (see identification plate)
- the code and description of the part ordered (see table)
- the quantity required
- the preferred means of shipment

(11-000-00-EN)

TORQUE WRENCH SETTINGS		
Structural screws		
Pitch	Nm	
M6	11	All
M12X1.00	30	All
Nozzles		
Pitch	Nm	
1/8 npt	5	

EXPLODED VIEW

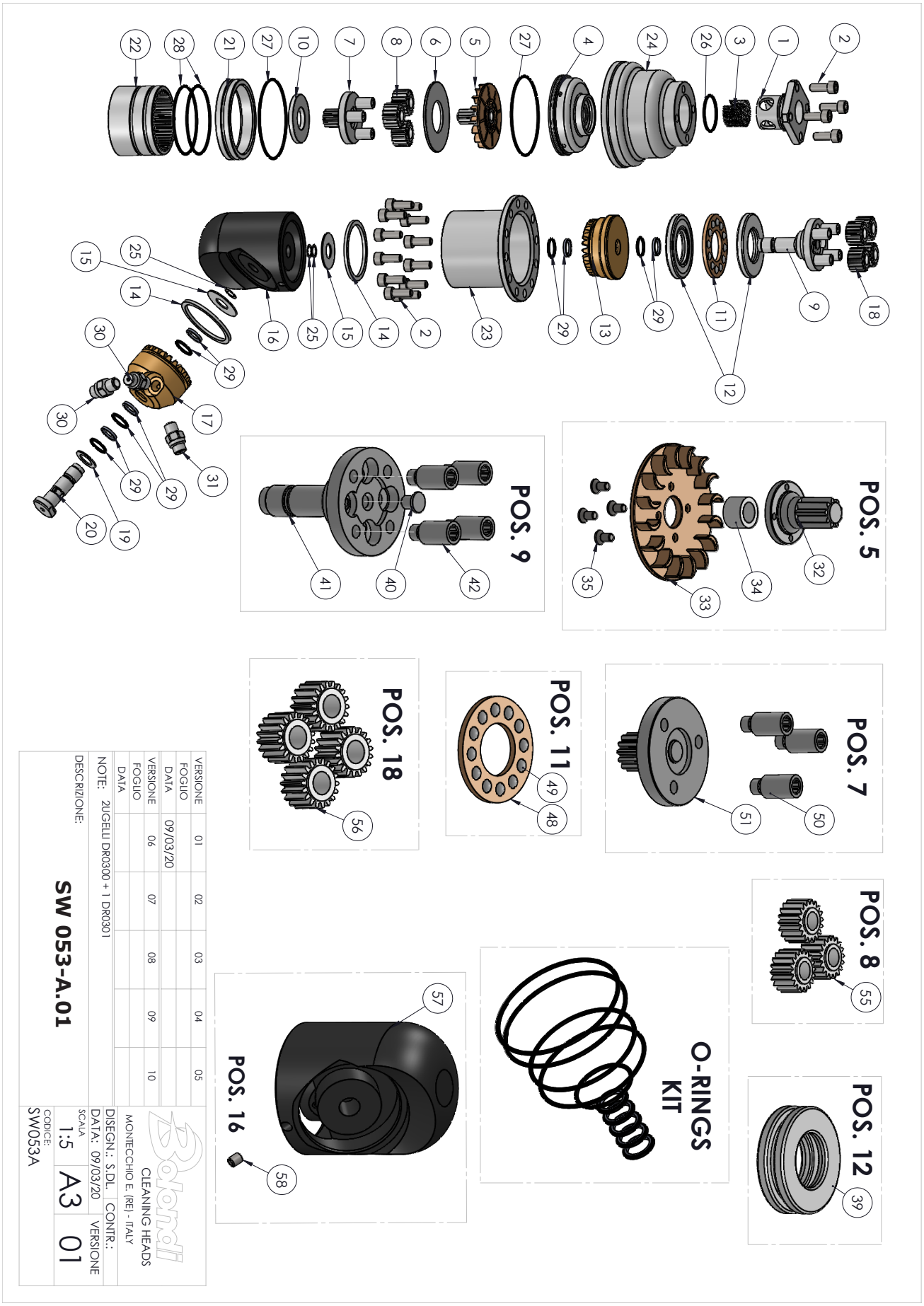

NOTES

NOTES

Via A.Volta, 4
42027 MONTECCHIO E. (Reggio E.) Italy
Tel. (0522) 864434 - Fax 865780
E-mail: bolondi@bolondi.com - www.bolondi.com

SW 053-A.01-MANUAL Rev.00
Last update 02.12.2020